Brennerlanze 9-SX-"L" welded

09-W301-4G-D

23-04-2018

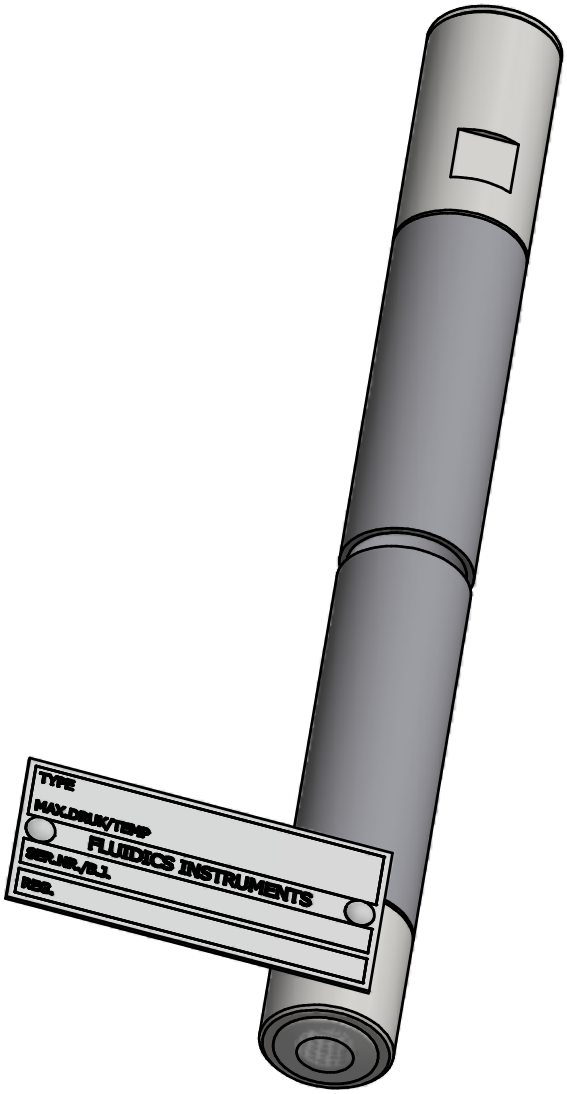

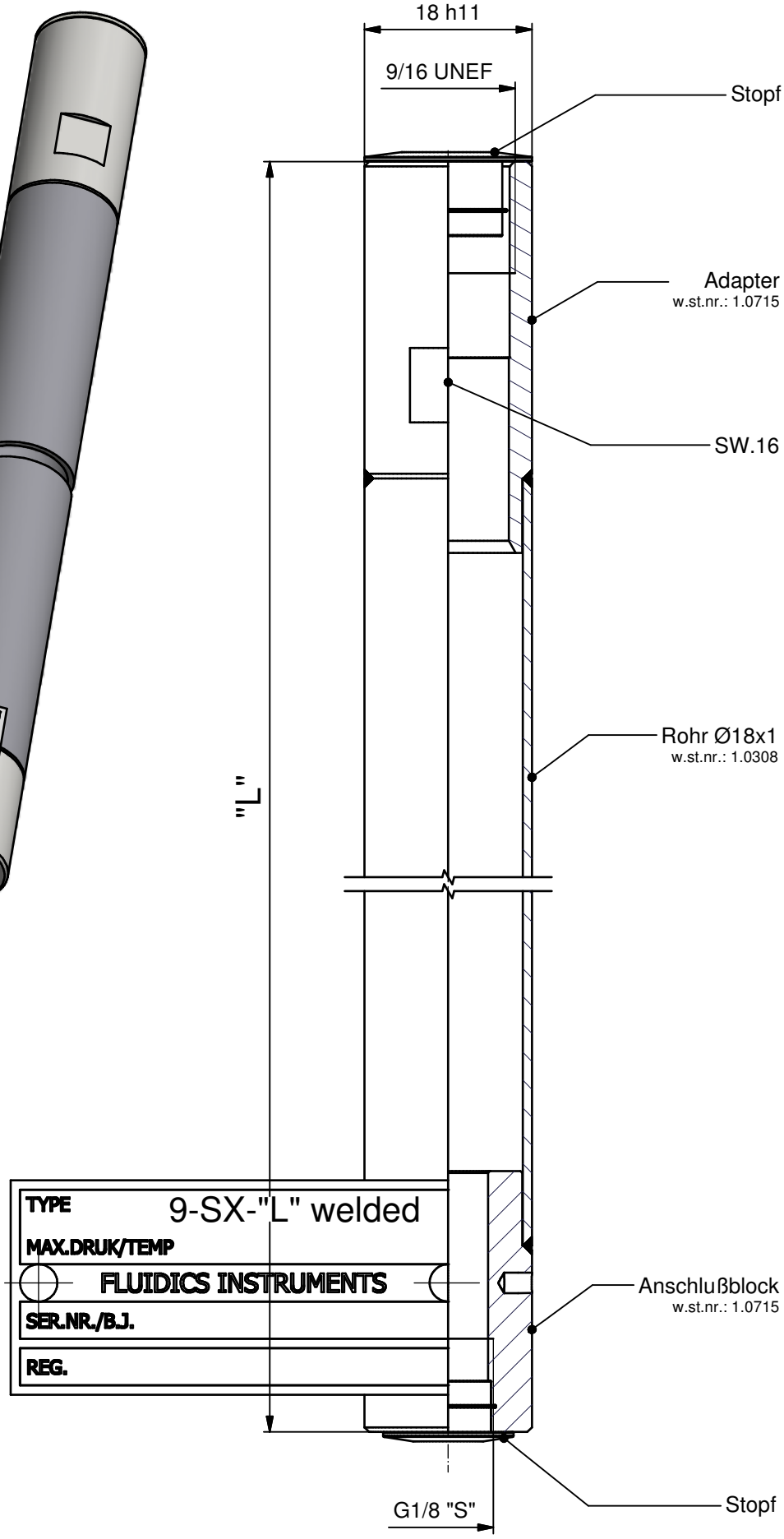

© *Fluidics Instruments BV*