Burnerlance 12-HF-"L" Welded

12-XQ01-4G-E

21-06-18

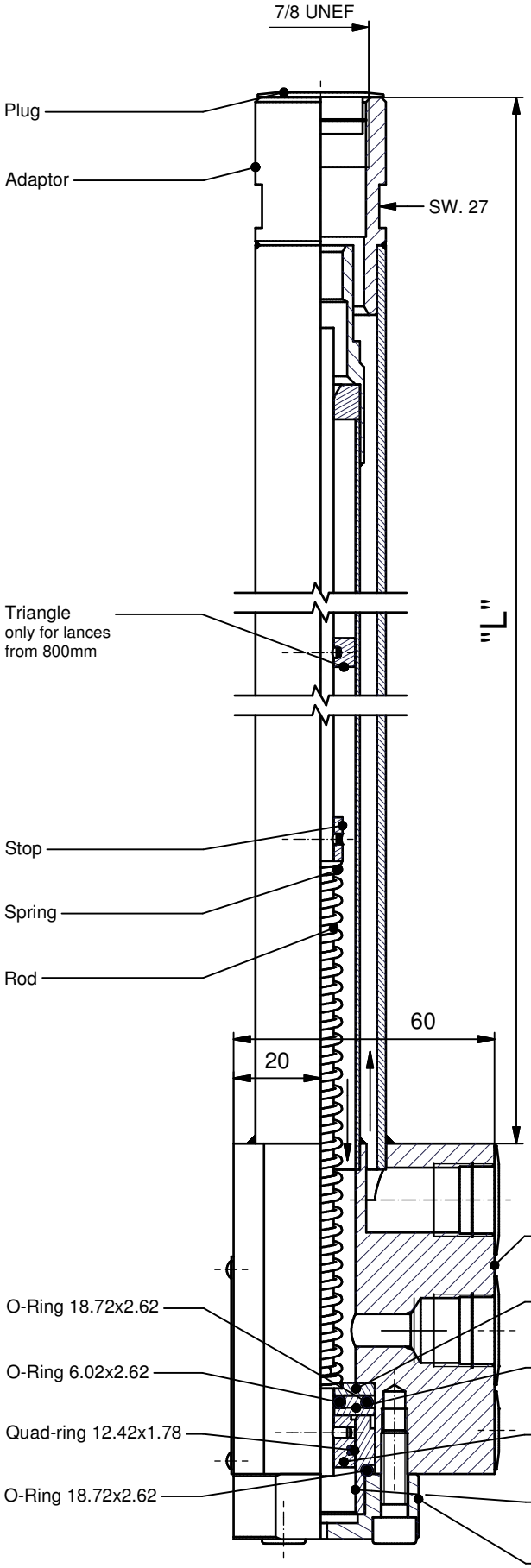

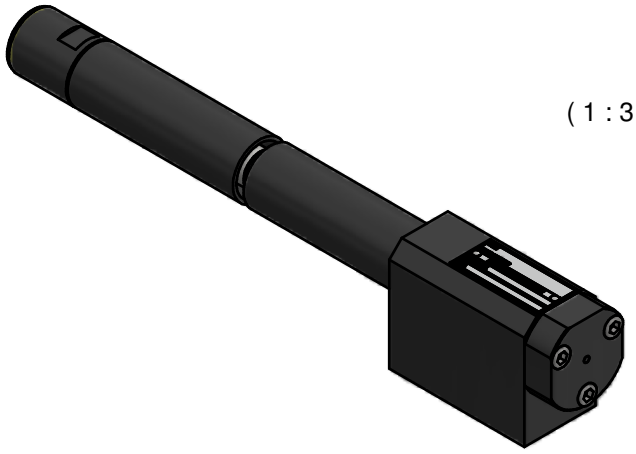

(1 : 3)

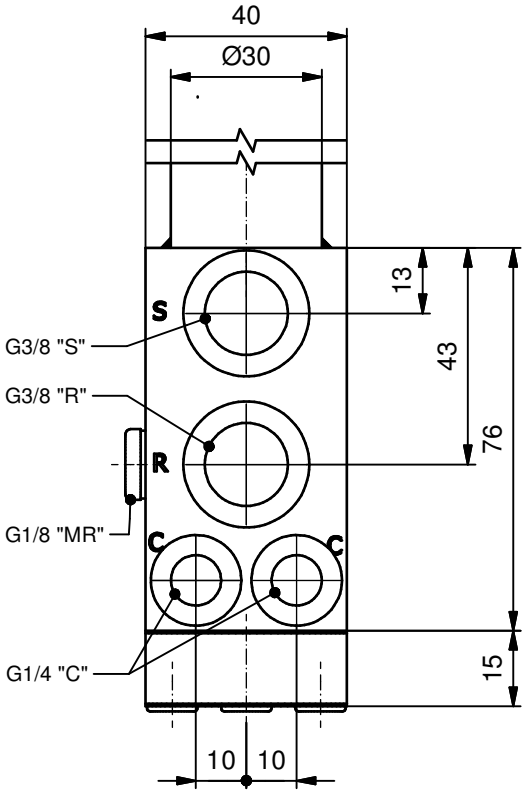

© *Fluidics Instruments BV*