Burnerlance 12-EH-"L" Welded

12-XS01-4G-E

30-03-22

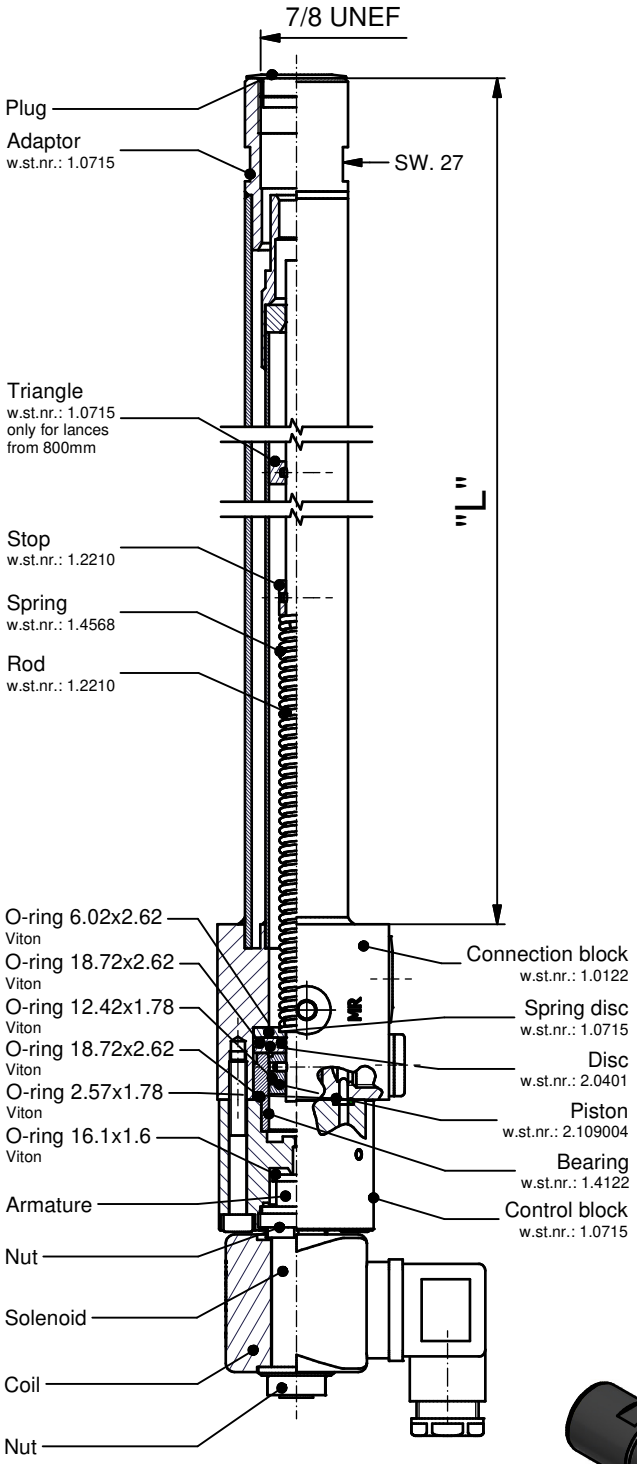

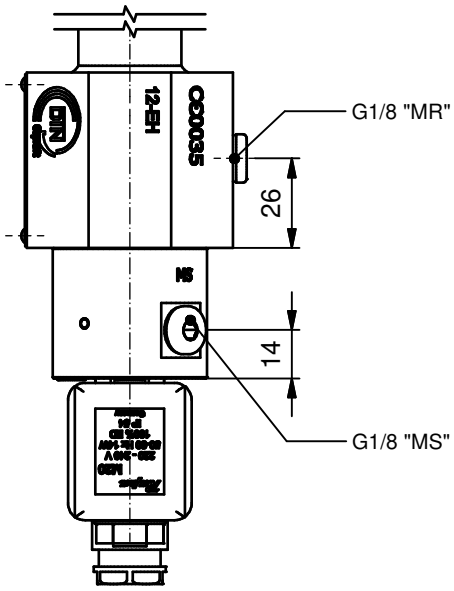

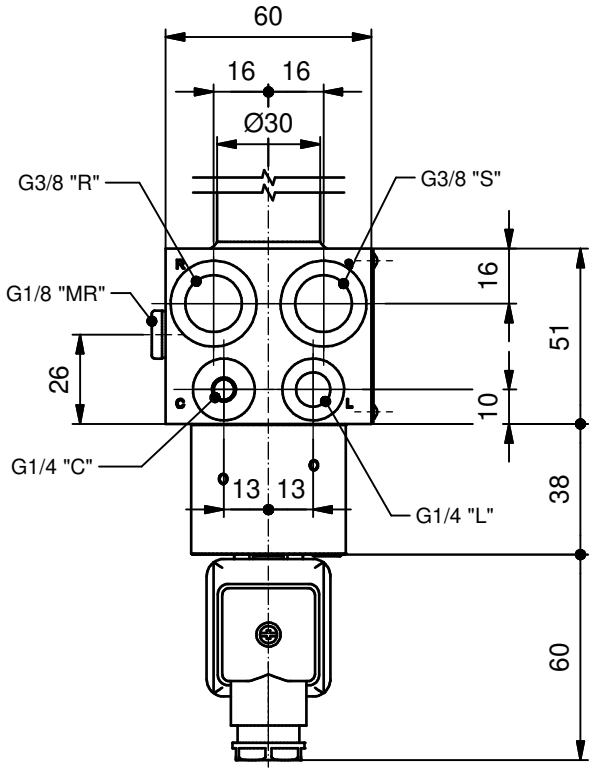

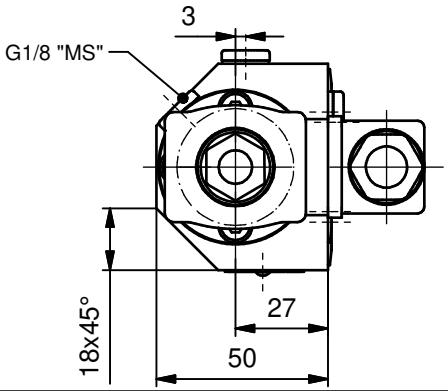

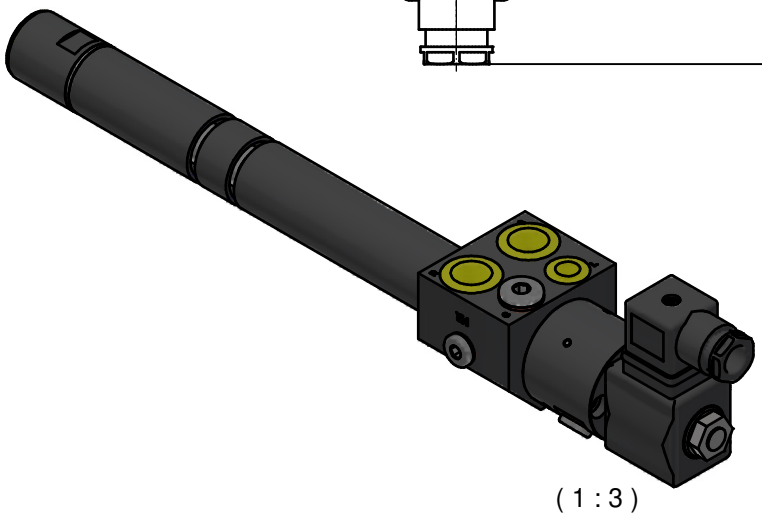

(1 : 3)

© *Fluidics Instruments BV*