Heizplatte EB 24-A
220V - 75W

24-PF3C-4G-D

09-06-20

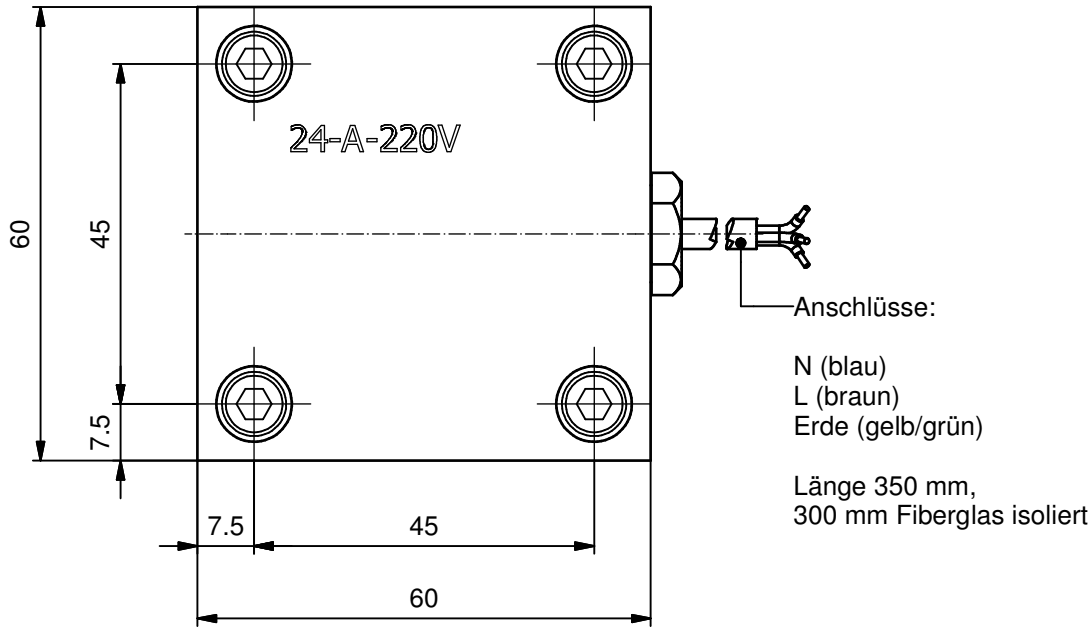

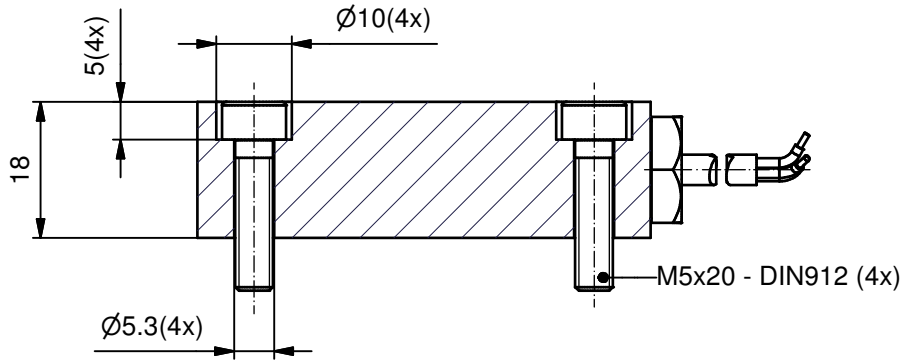

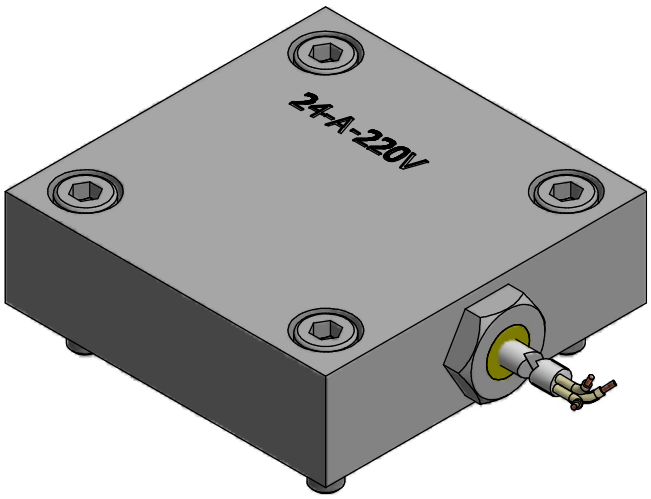

© *Fluidics Instruments BV*

Heizplatte EB
EB 24-A
220V

24-PF3C-4G-D

09-06-20

Brennerlanze	Regler
12-HA-HRA-D-"L"	
24-HA-APR-E-"L"-"D"	
24-HA-AR-E-"L"-"D"	
24-HA-HRA-D-"L'-"D"-"d"	
24-HA-HRA-D-"L'-"D"-"d"-R	
24-HA-D-"L"-"d"	
24-HA-D-"L"-"d"-H-R	
24-HA-D-"L"-"d"-14301	
24-HA-D-"L"-"d"-R	
24-HA-D-"L"-"d"-H-RR	
24-HA-S-"L"-"d"-14301	
24-HA-SA-E-"L"	
24-HA-SA-E-"L"-RR K1050	
24-HA-SA-E-"L"-H-R	
24-HA-SA-D-"L"	
24-HA-SA-D-"L"-14301	
24-HA-SA-"L"-14301	
24-HA-SA-D-"L"-14301 K1050	
24-HA-SAC-E-"L"	
24-HA-SAC-E-"L"-H-R	
24-HA-SAC-E-"L"-H-RR	
24-HA-SAC-E-"L"-H-14301	
24-HA-SAC-E-"L" K1050	
24-HA-SAC-E-"L" 1/2K1050	
24-HA-SAC-G-"L"-14301-1/2K1050	
32-HA-SAC-N-"L"	
32-HA-SAC-N-"L"-R	
32-HA-SAC-N-"L"-RR	
32-HA-SAC-N-"L"-H-RR	
32-HA-SAC-N-"L"-H-RR K1050	
32-HA-SAC-N-"L"-14301	
32-HA-SAC-N-"L"-G	

© Fluidics Instruments BV