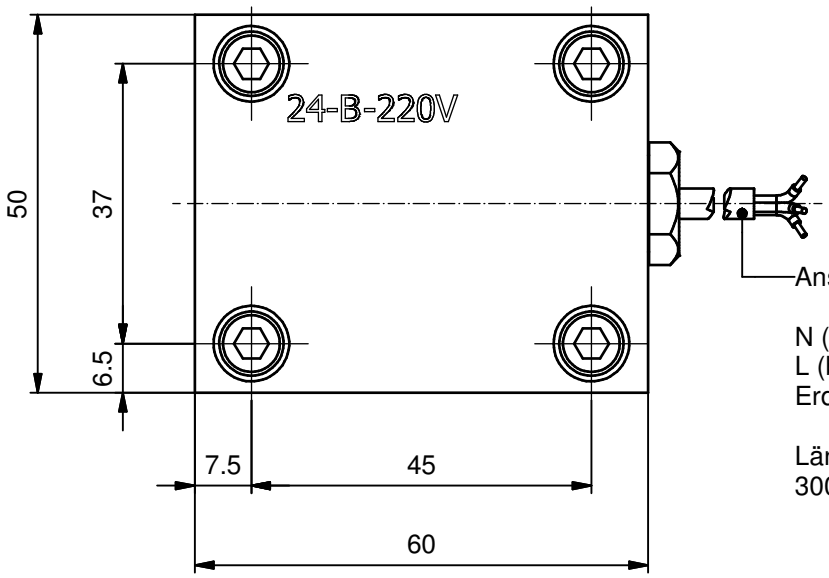

Anschlüsse:

N (blau)
L (braun)
Erde (gelb/grün)

Länge 350 mm,
300 mm Fiberglas isoliert

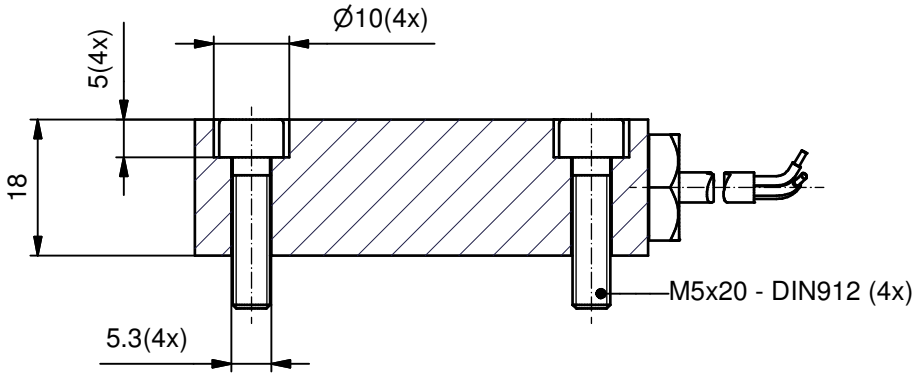

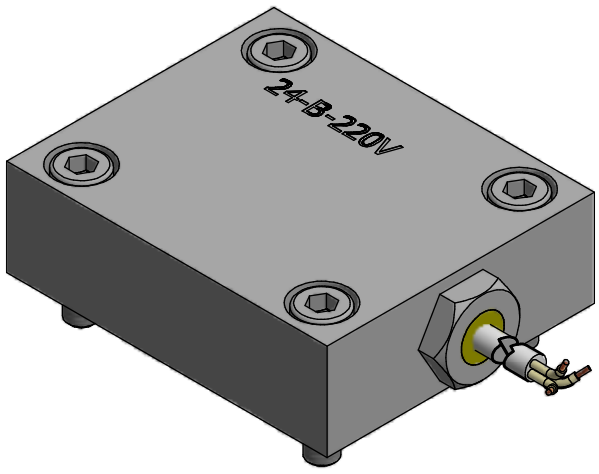

Brennerlanze	Regler
12-EHR-ND-"L"	40-VX1
12-EHR-"L"-"D"	40-VX2
12-EHR-N-"L"-"D"	40-VK1
(12-EHR-K-"L"-"D")	40-VK2
12-EH-N-"L"	40-VF1
24-L-"L"	40-VF2
24-L-"L"-14301	40-VL1
24-L-"L"-14541	40-VL2
24-SX-"L"-14301	40-VK1D
24-SX-N-"L"-14301	40-VK2D
24-SXBA-"L"-14301	40-VZ1K
24-MK-"L"-14301	40-VZ2K
24-EHR-N-"L"-"D"-"d"	40-VK1K
24-H-"L"-"d"	40-VK2K
24-H-"L"-"d"-R	40-VK1M
24-HM-L-"d"	40-VK2M
24-HM-"L"-"d"-14301	40-VB1
24-EH-"L"-"d"	40-VB2
24-EH-"L"-"d"-G	40-VZ1KR
24-EH-"L"-"d"-H-R	40-VZ2KR
24-EH-"L"-"d"-R	40-VX1K
24-EH-"L"-"d"-H-14301	40-VX2K
24-SG-"L"	40-VX1KR
24-SF-"L" Steam	40-VX2KR
24-S-"L" Air	40-VC1
24-S-"L" Steam	40-VC2
24-S-"L"	40-VC1K
24-S-"L"-F Air	40-VC2K
24-SKE-"L"	40-VZXL1K
24-SK-"L"	40-VZXL2K
24-SK-"L"-14301	40-VZXL1
24-SK-"L"-304	40-VZXL2
24-SK-"L"-14301 K1050	40-VZST1
24-SK-"L"-NPT	40-VZST2
24-SKR-"L"-"D"	40-VZ1
24-SKSA-"L"-14301	40-VZ2
24-SKSA-"L"-14301 K1050	40-VZM1
24-SKSB-"L"-14301	40-VZM2
24-SKSC-"L"-14301	40-VZ1L
24-SKSF-"L"	40-VZ2L
24-SKSG-"L"-14301	40-VZN1
24-SKSH-"L"-14301	40-VZN2
24-SKSH-"L"-14301 K1050	
24-SKSL-"L"-14301	
24-SKO-"L"	
24-SKO-"L"-14301	
24-SKO-"L"-14301 K1050	
24-SKO-N-"L"-14404 K1050	
24-SKO-"L"-H-14301 K1050	

© Fluidics Instruments BV

Brennerlanze	Regler
24-SKO-"L"-N	
24-SKL-"L"	
24-SKP-"L"-14301	
24-SKSN-"L"-14301	
24-SKSM-"L"-14301	
40-H-B-"L"-"d"	
40-H-B-"L"-"d"-H	
40-HAZ-B-"L"-"d"-H	
40-HA-B-"L"-"d"	
40-HA-B-"L"-"d"-H	
40-HA-SA-B-"L"	