Brennerlanze 24-EHR-N-"L"-"D"-"d" Welded

24-X101-4G-D

09-07-19

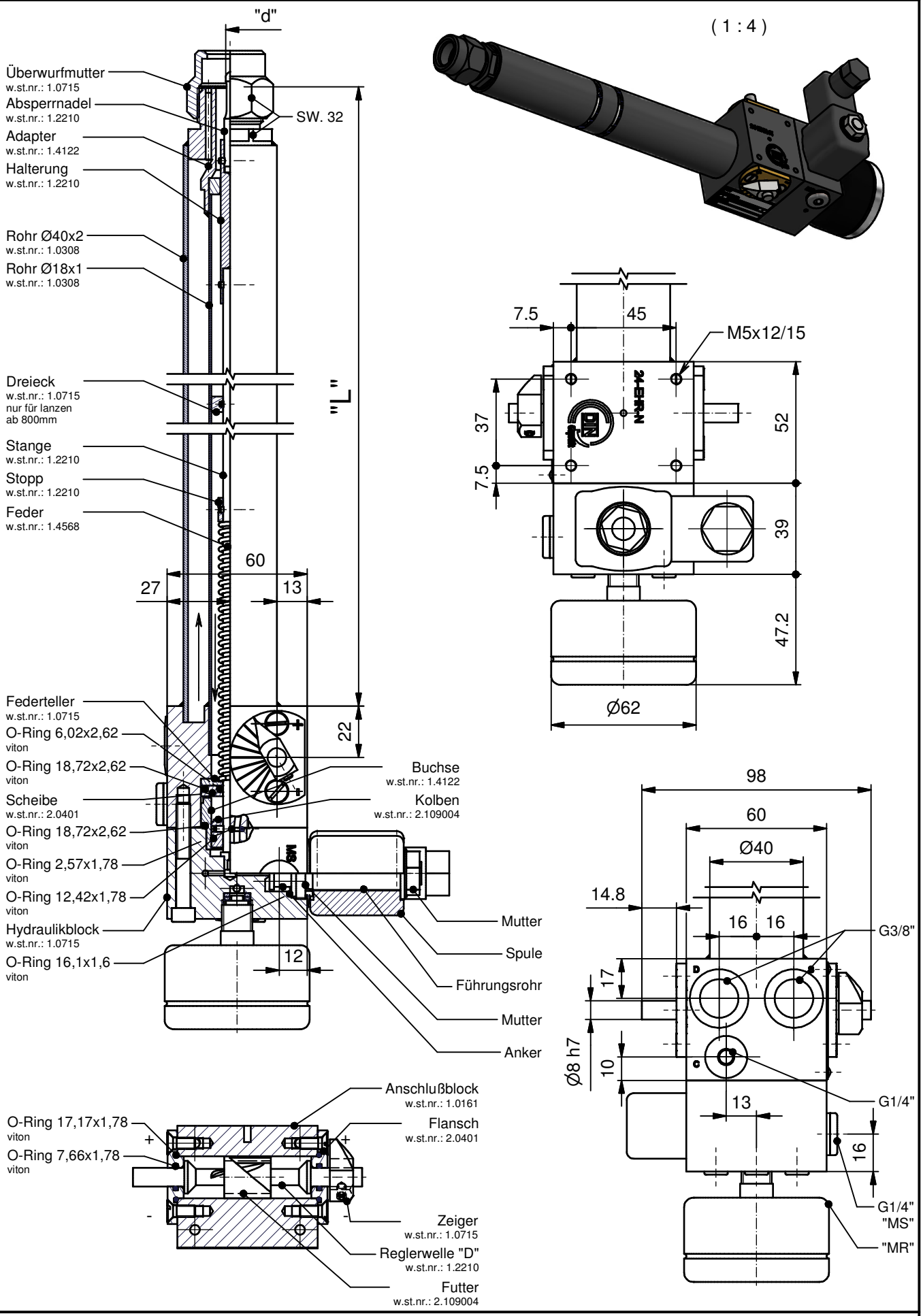

© *Fluidics Instruments BV*