Burnerlance 24-H-"L"-"d" Welded

24-XG01-4G-E

14-08-18

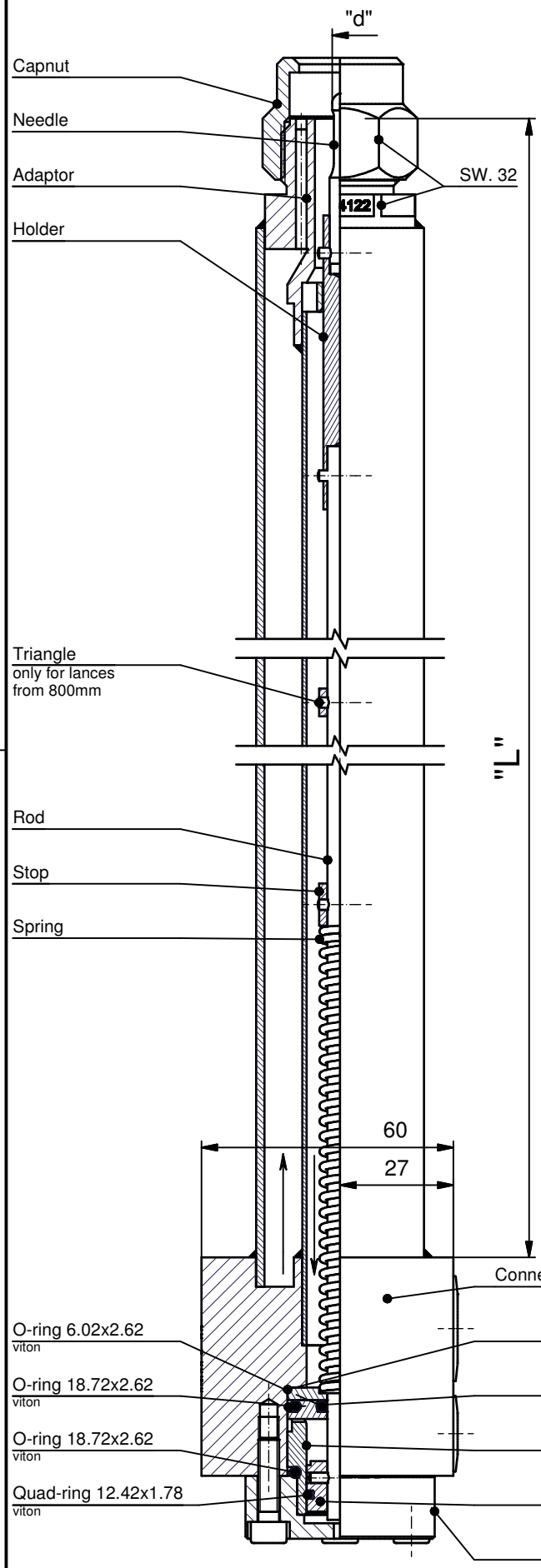

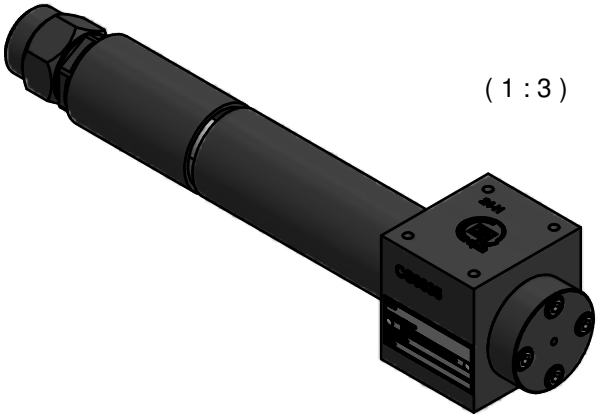

(1 : 3)

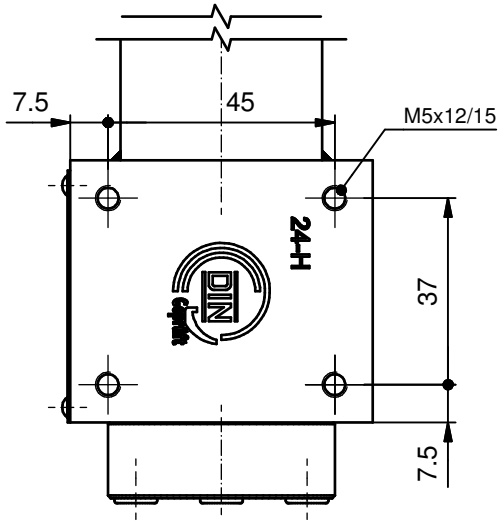

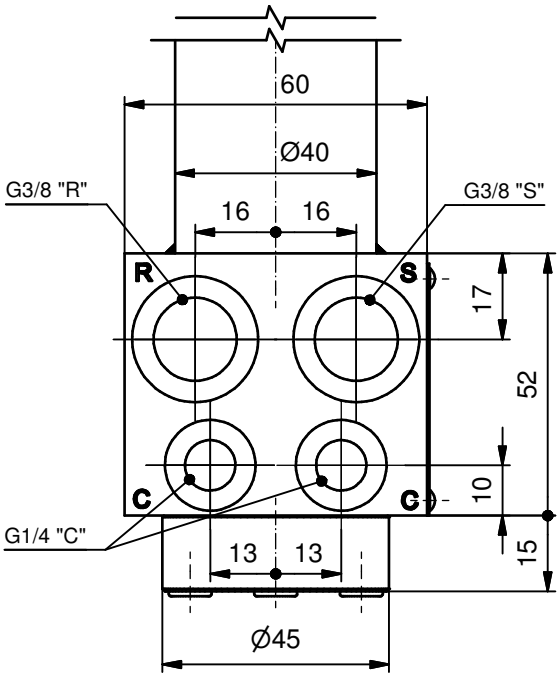

© *Fluidics Instruments BV*