Brennerlanze 24-HA-SAC-E-"L" Welded

24-YH01-4G-D

30-10-19

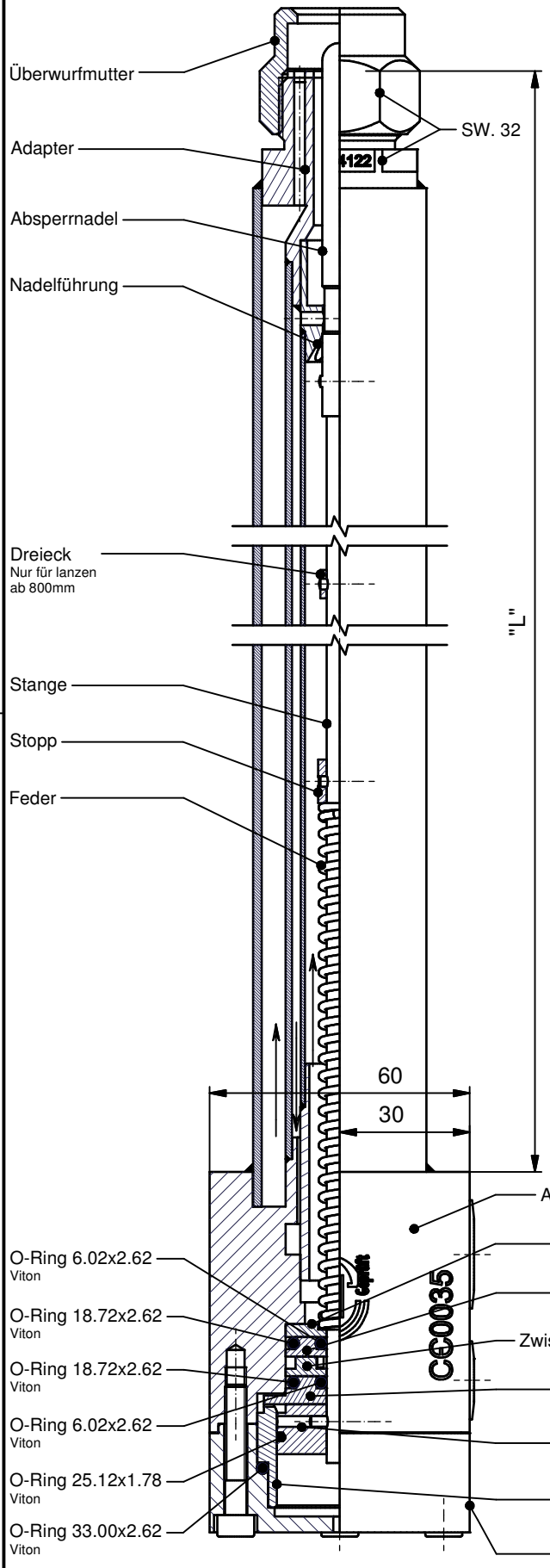

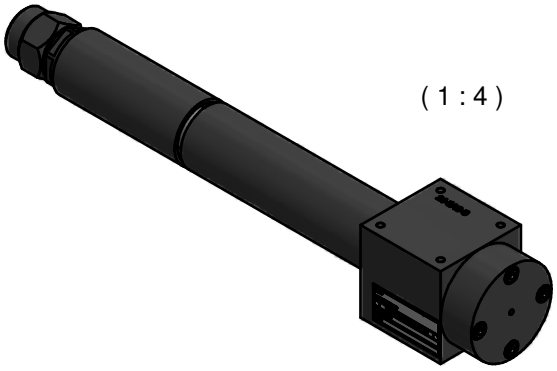

(1 : 4)

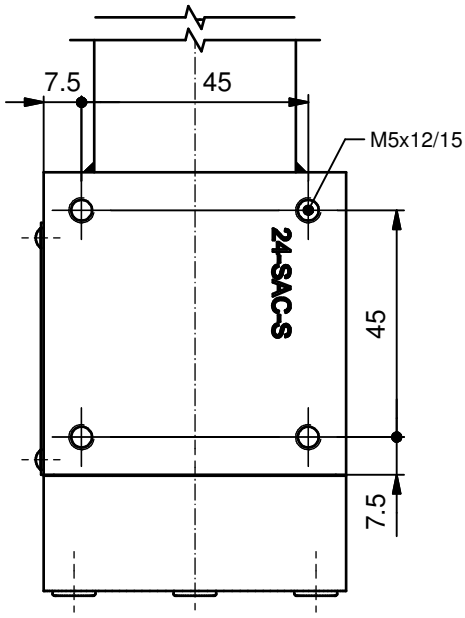

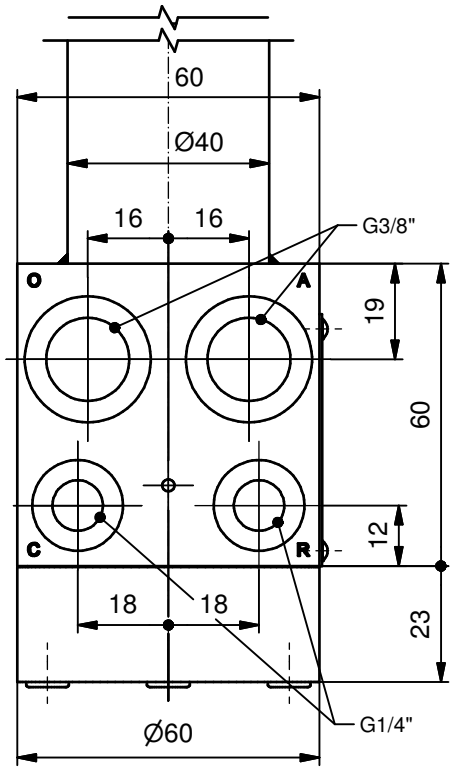

© *Fluidics Instruments BV*