Heating plate EB 32-VK
220V - 75W

32-PF6G-4G-E

09-06-20

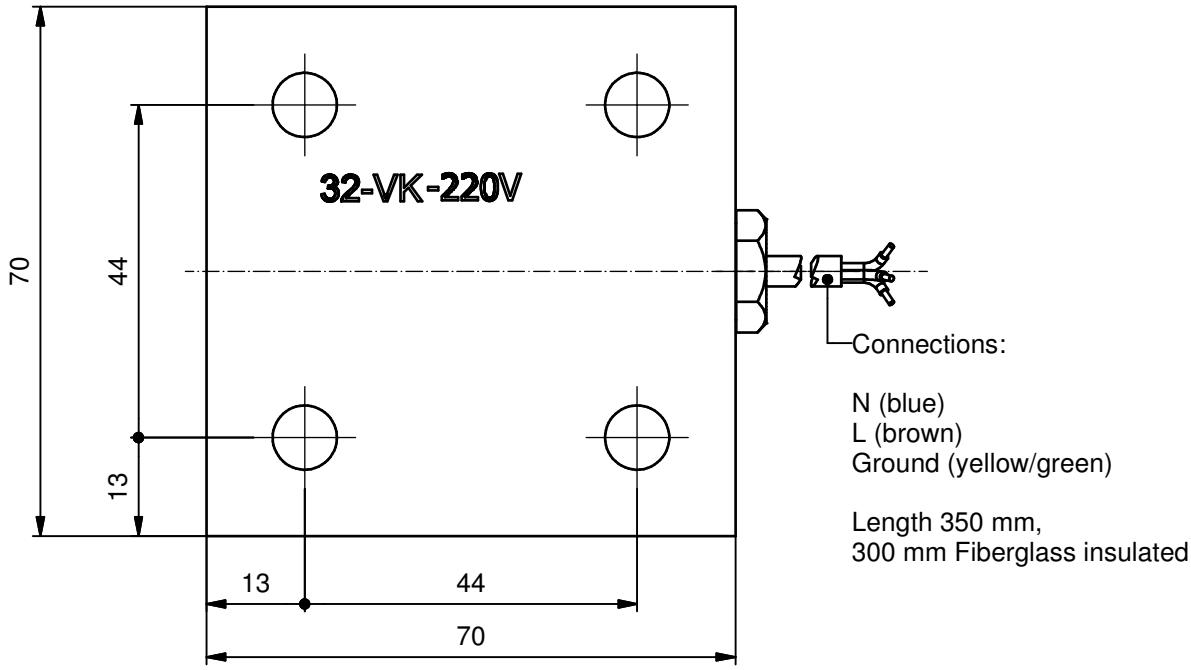

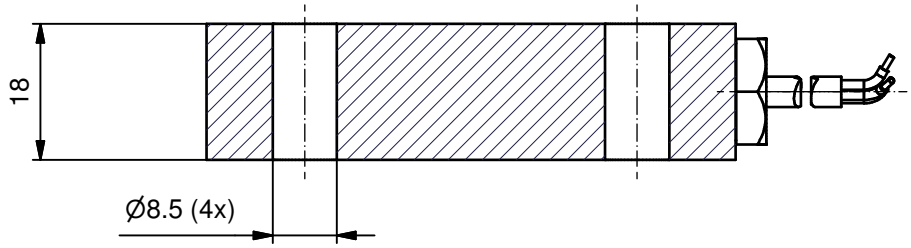

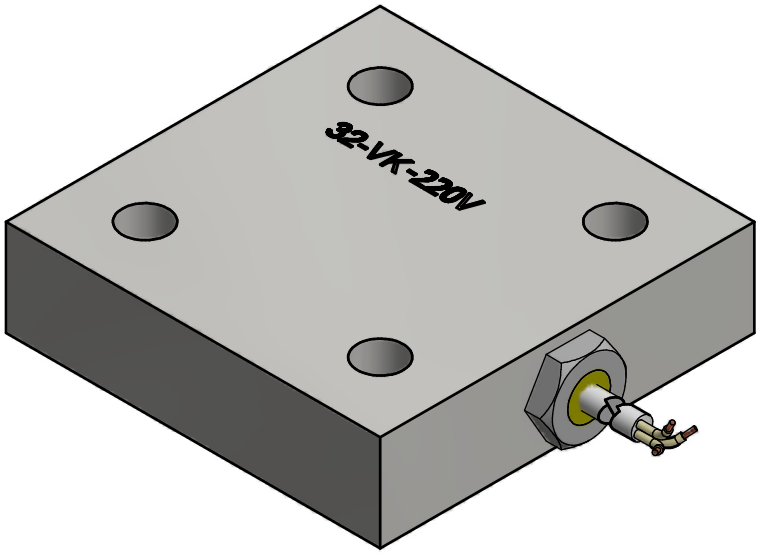

© *Fluidics Instruments BV*

Heating plate EB
EB 32-VK
220V

32-PF6G-4G-E

09-06-20

Burner lance	Regulator
	32-VX1
	32-VX2
	32-VU1
	32-VU2
	32-VW1
	32-VW2
	32-VK1
	32-VK2
	32-VF1
	32-VF2
	32-VL1
	32-VL2
	32-VG1
	32-VG2
	32-VK1K
	32-VK2K
	32-VT1
	32-VT2
	32-VK1L
	32-VK2L
	32-VK1M
	32-VK2M
	32-VK1D
	32-VK2D
	32-VS1
	32-VS2
	32-VE1
	32-VE2
	32-VC1
	32-VC2
	32-VKST1
	32-VKST2

© Fluidics Instruments BV