Heizplatte EB 32-VE
110V - 75W

32-PF6H-4H-D

09-06-20

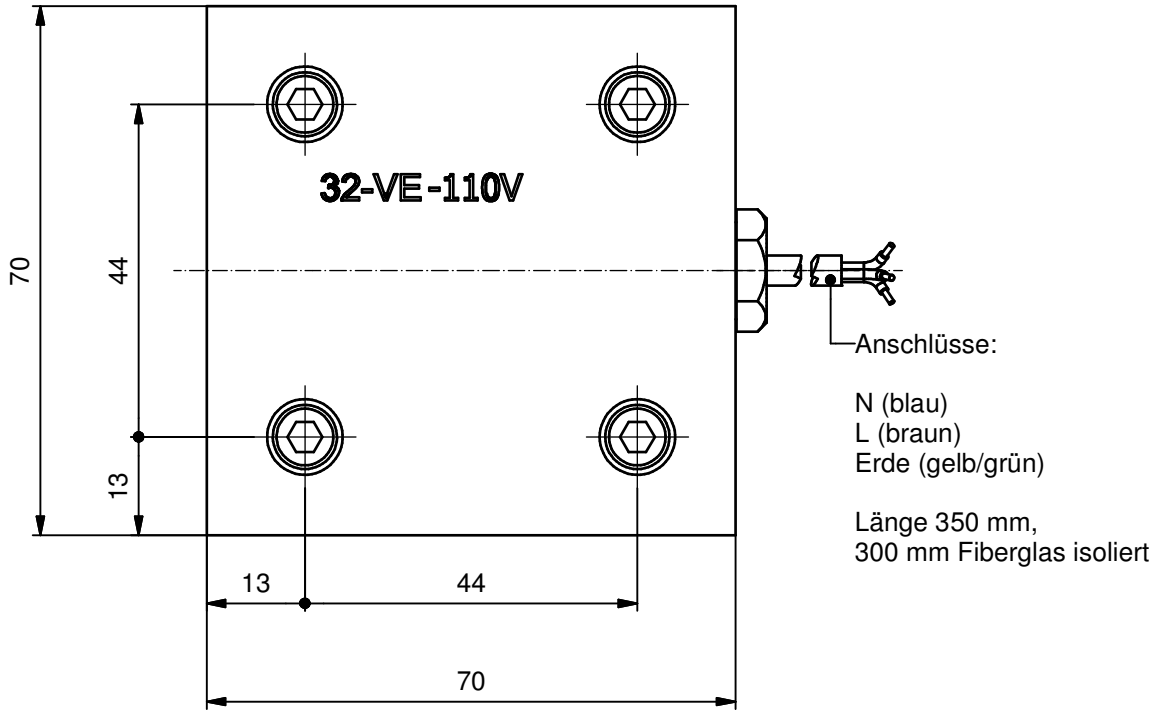

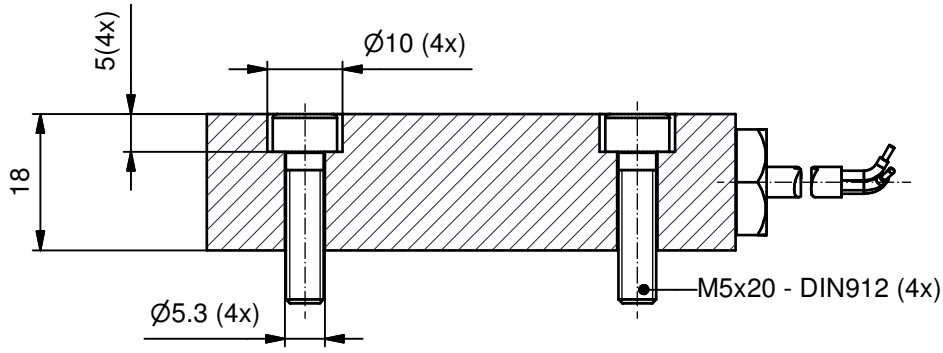

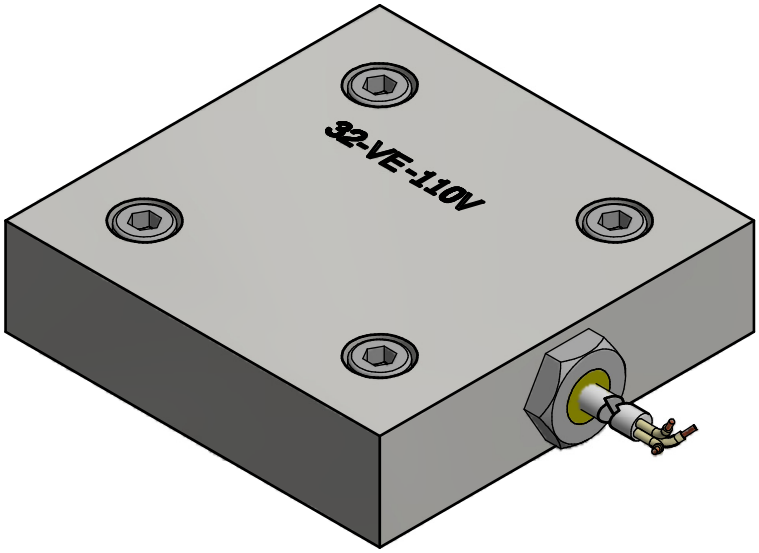

© *Fluidics Instruments BV*

Heizplatte EB
EB 32-VE
110V

32-PF6H-4H-D

09-06-20

Brennerlanze	Regler
40-L-"L"	
40-H-"L"-"d"	
40-EH-BMS-"L"-"d"	
40-EH-"L"-"d"	
40-EH-"L"-"d"-R	
40-HA-D-"L"-"d"	
40-HA-D-"L"-"d"-R	
40-HA-D-"L"-"d"-H-R	
40-HA-SA-E-"L"	
40-HA-SA-E-"L"-R	
40-HA-SA-E-"L"-N K1050	
40-S-"L" Air	
40-S-"L" Steam	
40-HA-SAC-E-"L"	
40-HA-SAC-E-"L"-R	
40-HA-SAC-E-"L"-H-R	
40-HA-SAC-E-"L"-H-RR K1050	
40-HA-SAC-Y-"L"	
40-SK-"L"	
40-SK-"L"-14301	
40-SK-"L"-H	
40-SK-"L" Perlast	
40-SK-"L"-14301 Perlast	
40-SKA-"L" Perlast	
40-SKSF-N-"L"	
40-SKG1-"L"	
40-SKT-"L"	
60-SKG1-"L"	