Heating plate EB 32-VE
110V - 75W

32-PF6H-4H-E

25-05-2005

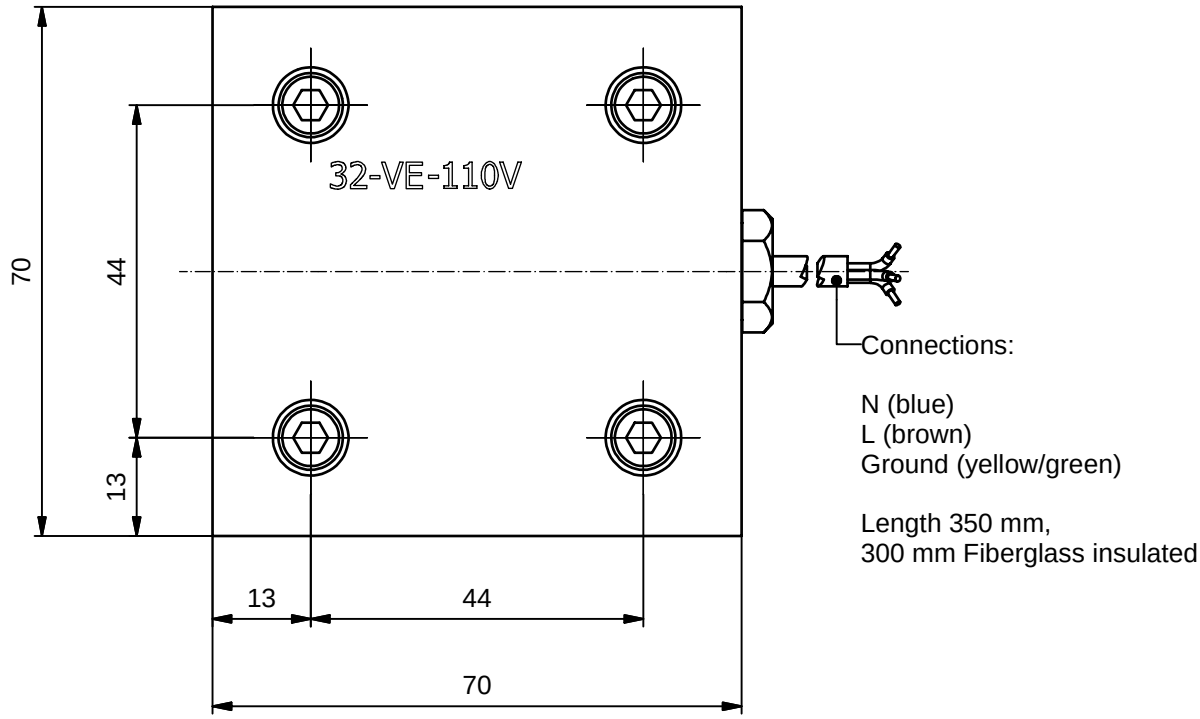

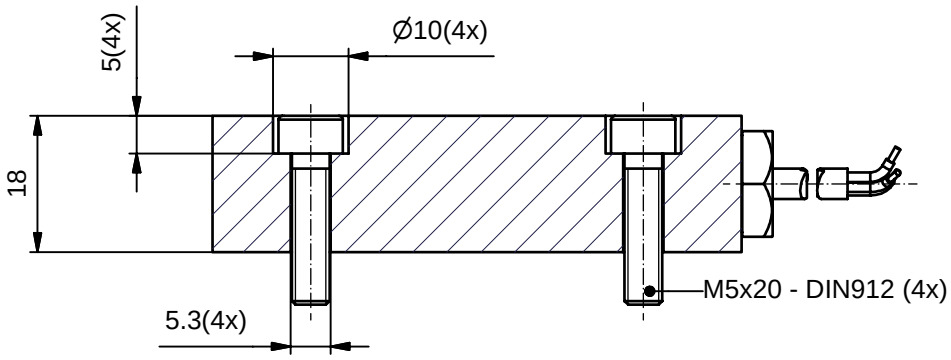

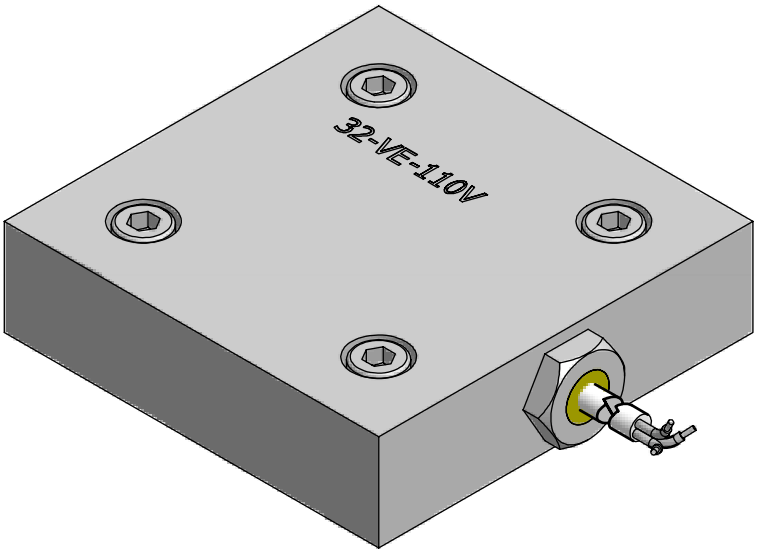

© *Fluidics Instruments BV*