Return disc atomizer 32 with needle
central bore for back-spill

32-W101-6G-E

31-08-09

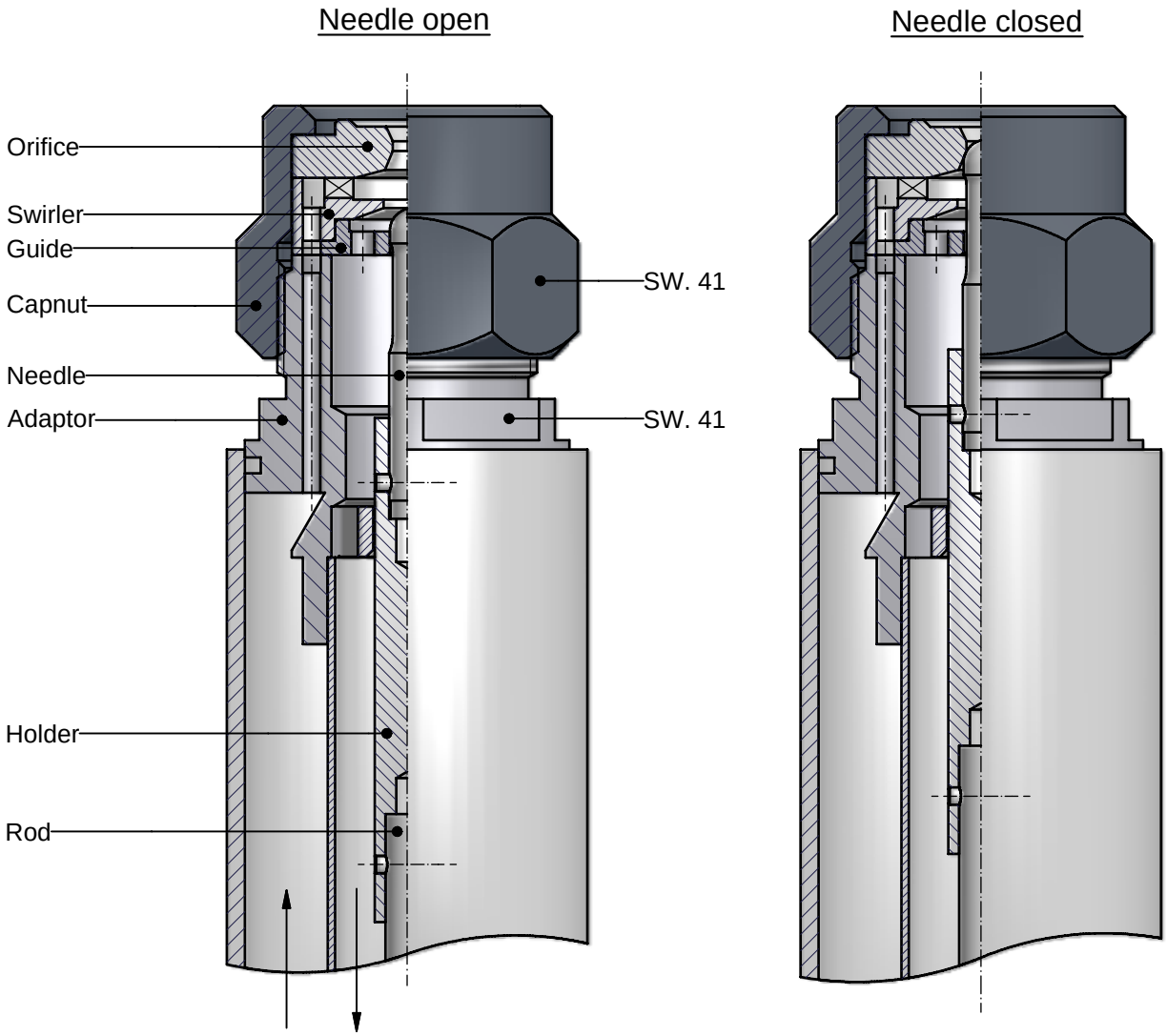

© *Fluidics Instruments BV*