Brennerlanze 32-EH-"L"-"d" Welded

32-XS01-4G-D
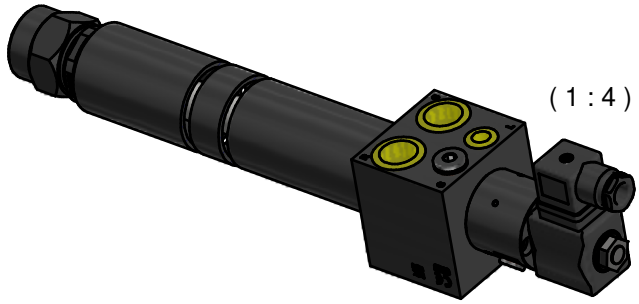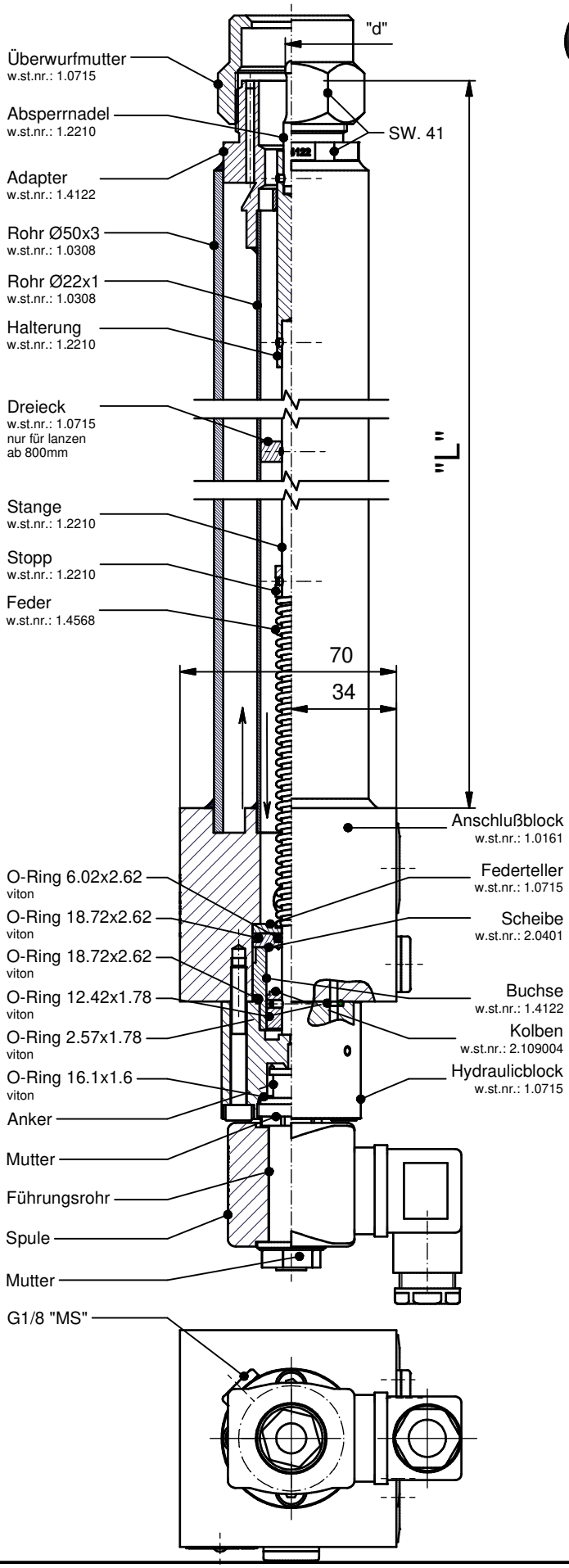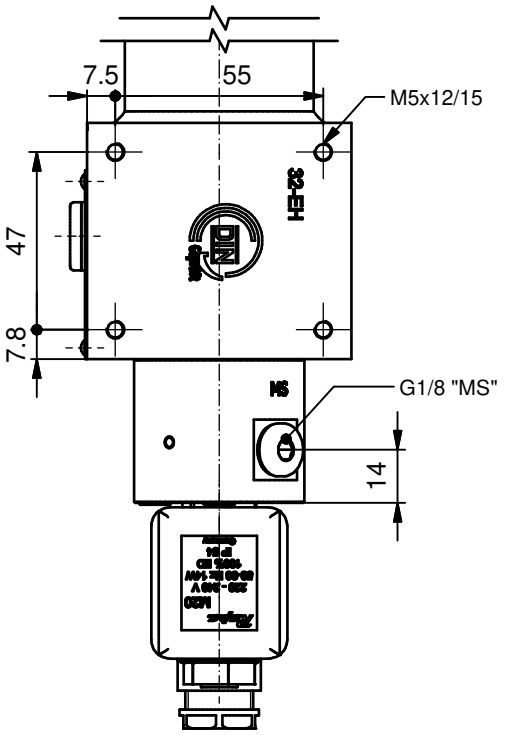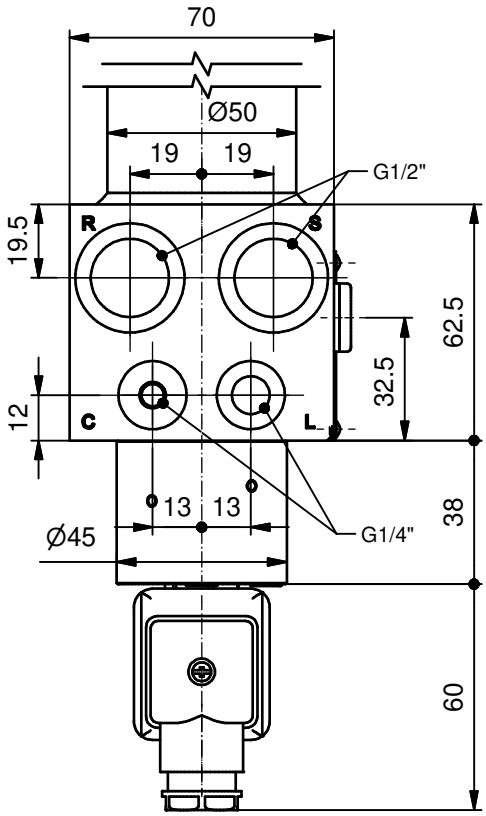
13-10-22