Burnerlance 32–EH–"L"–5T
for triplet atomizer

32–XS01–4P–E
07–02–06

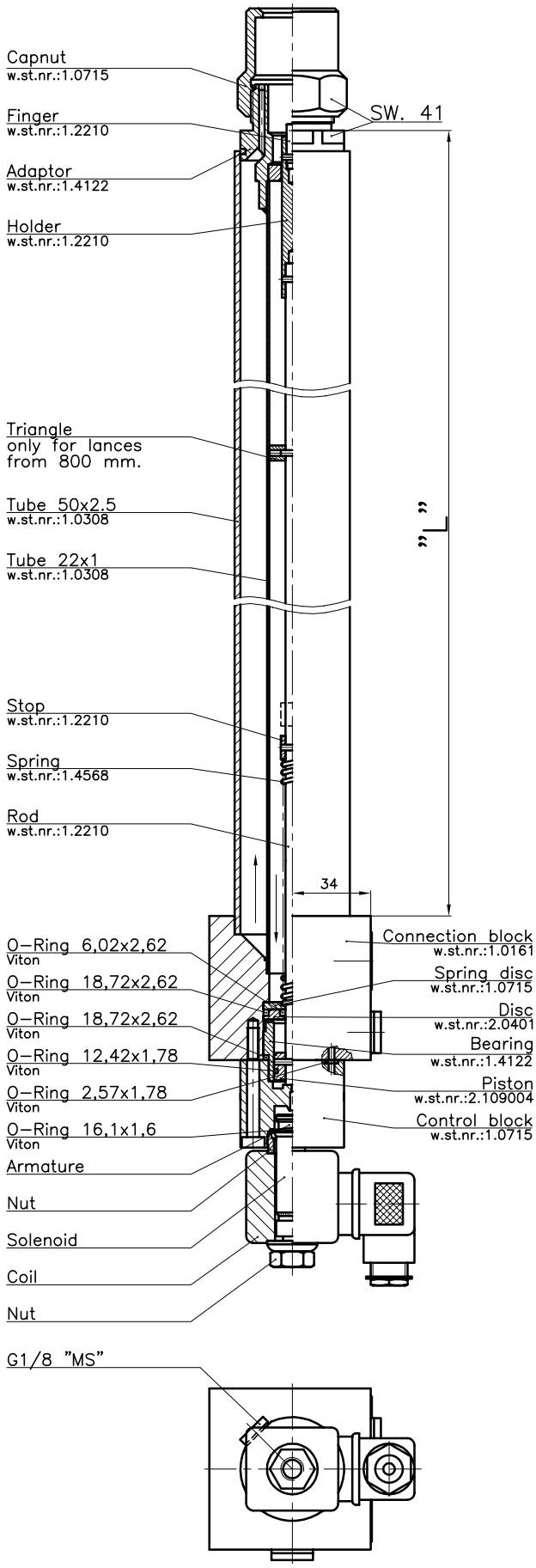

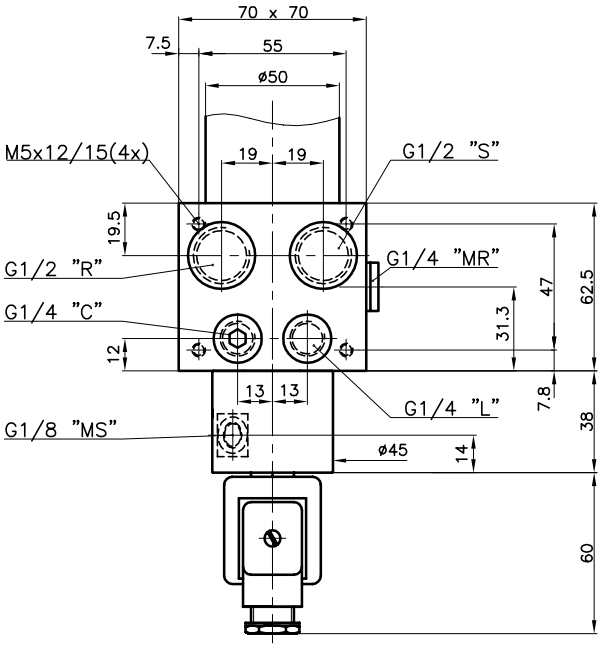

© Fluidics Instruments BV