Burnerlance 32-SK-"L"
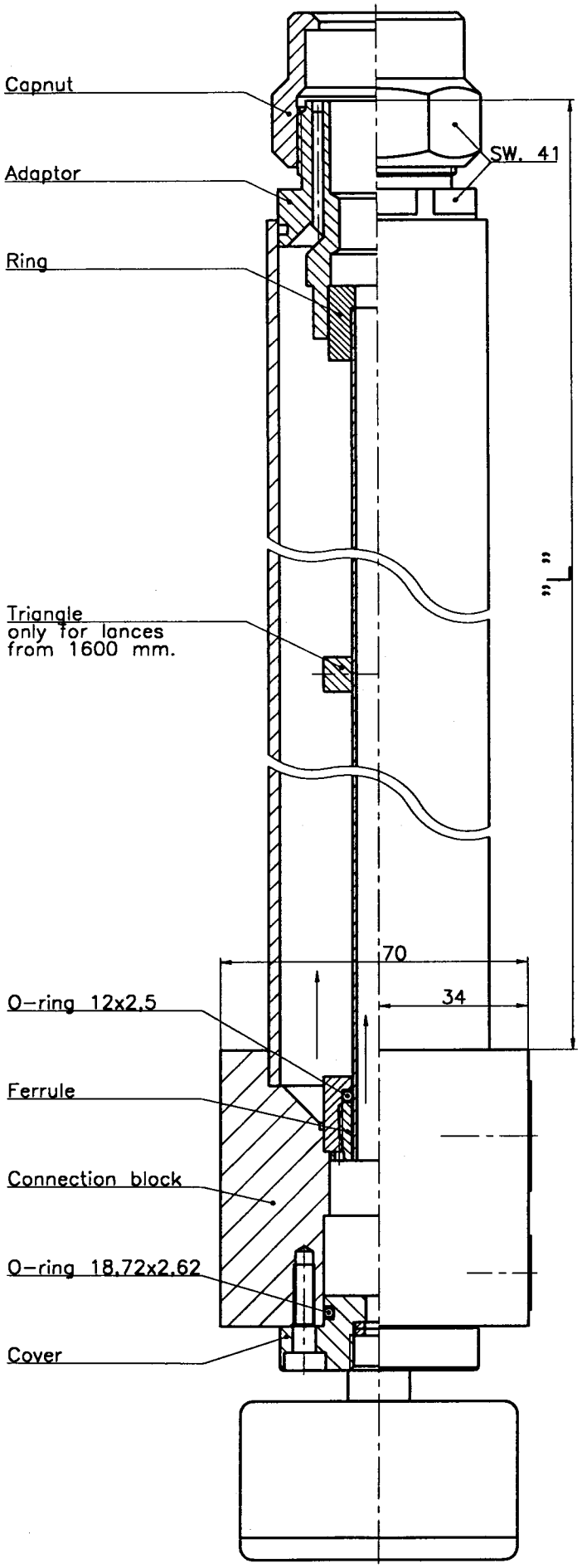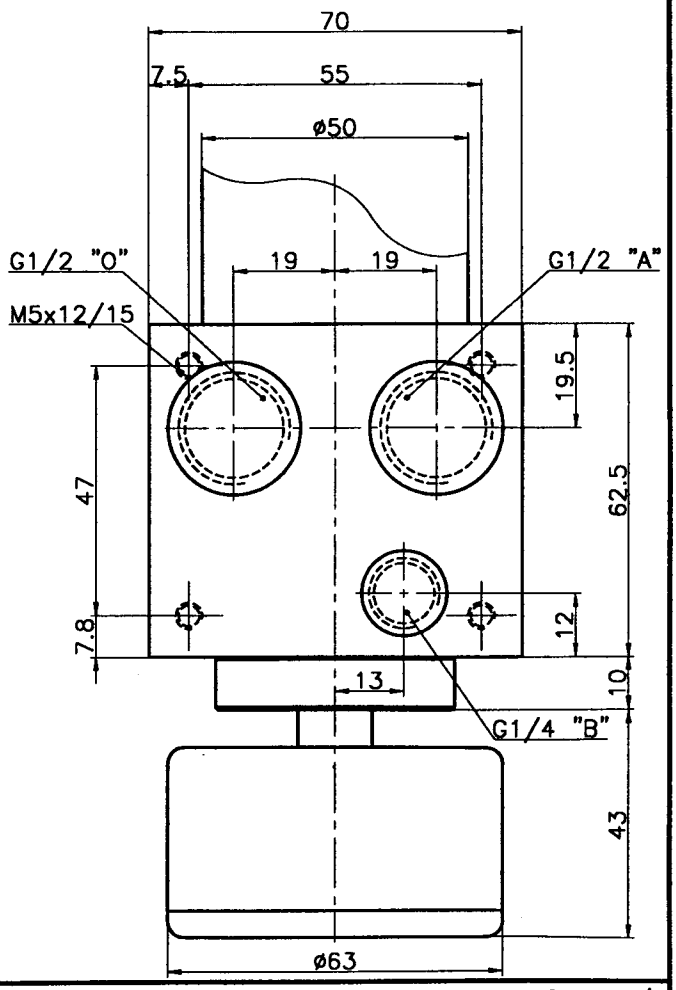
32-Z101-4G-E
09-09-98