Brennerlanze 40-L-"L" Welded

40-W201-4H-D

28-06-19

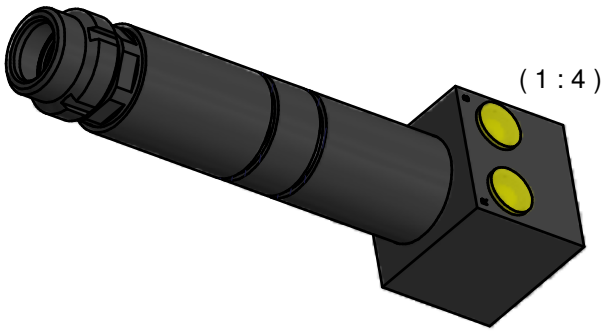

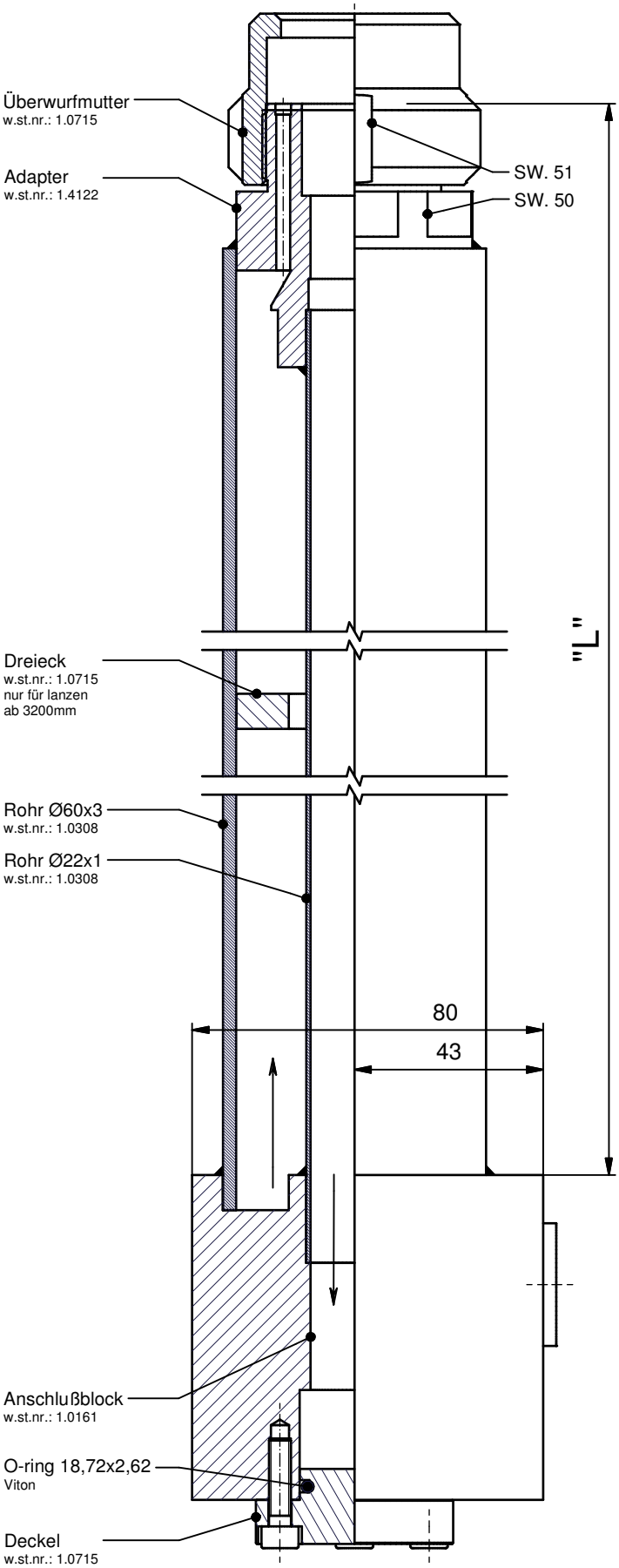

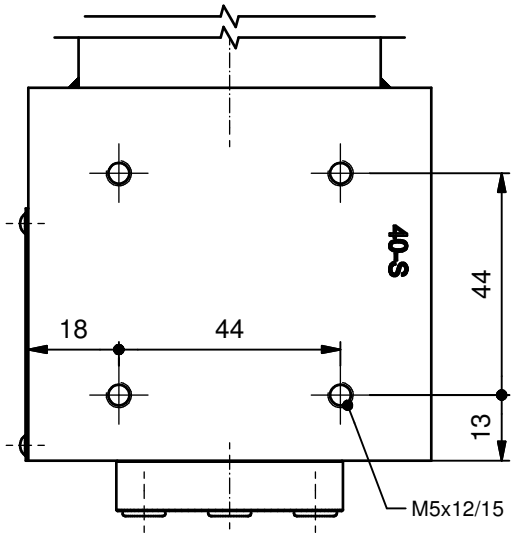

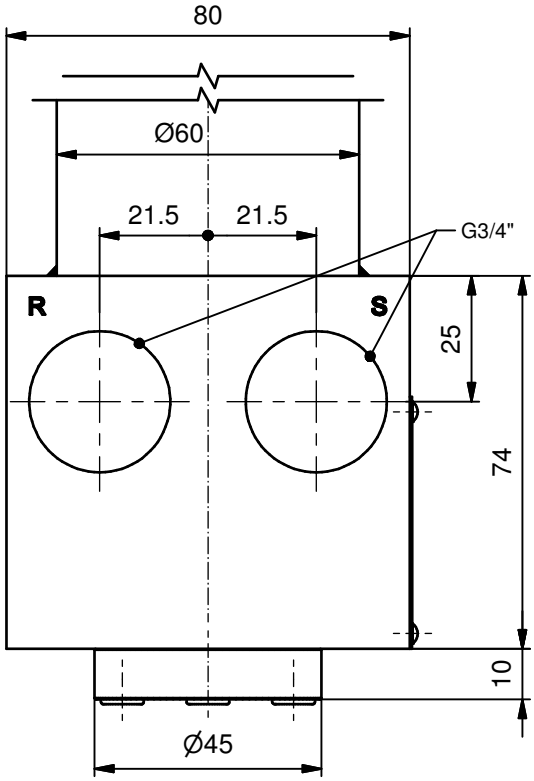

© *Fluidics Instruments BV*