Burnerlance 40-H-"L"-"d" Welded

40-XG01-4G-E

10-07-18

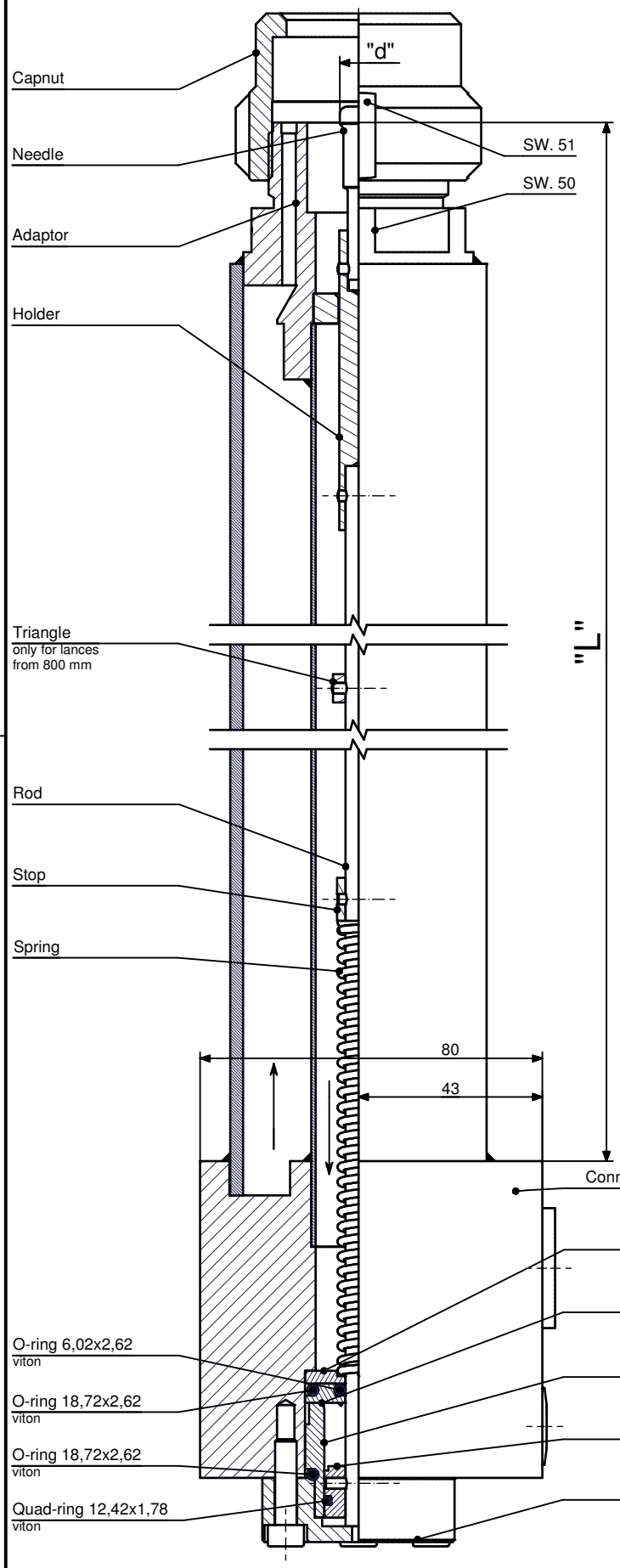

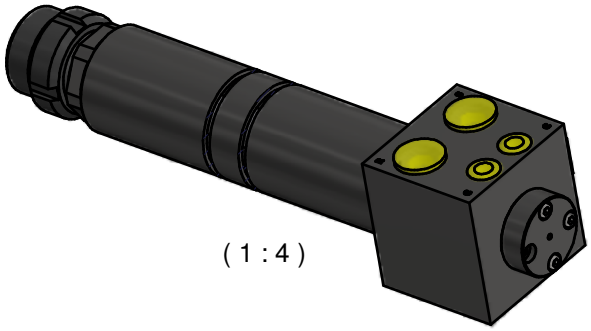

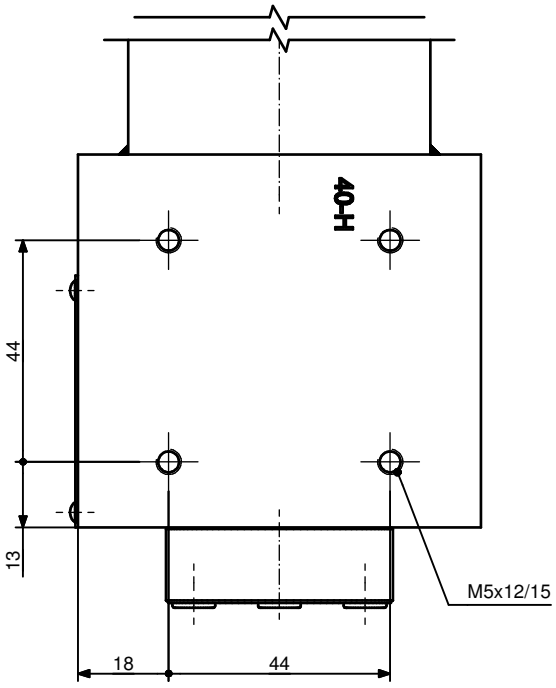

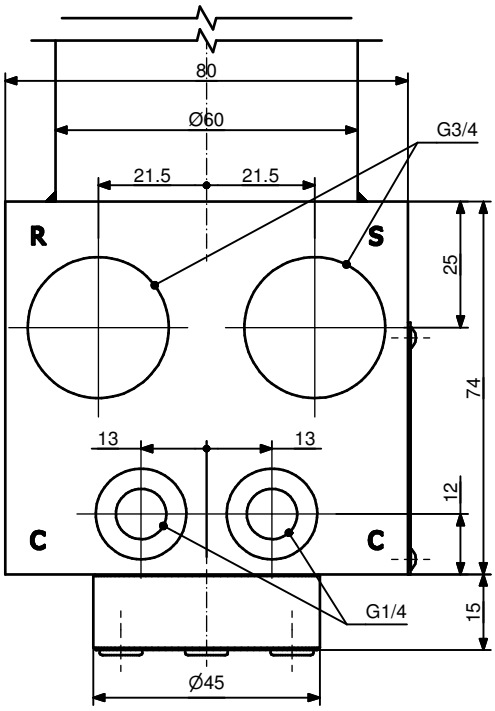

© *Fluidics Instruments BV*