Burnerlance 40-EH-"L"-"d" Welded

40-XS01-4G-E

28-06-19

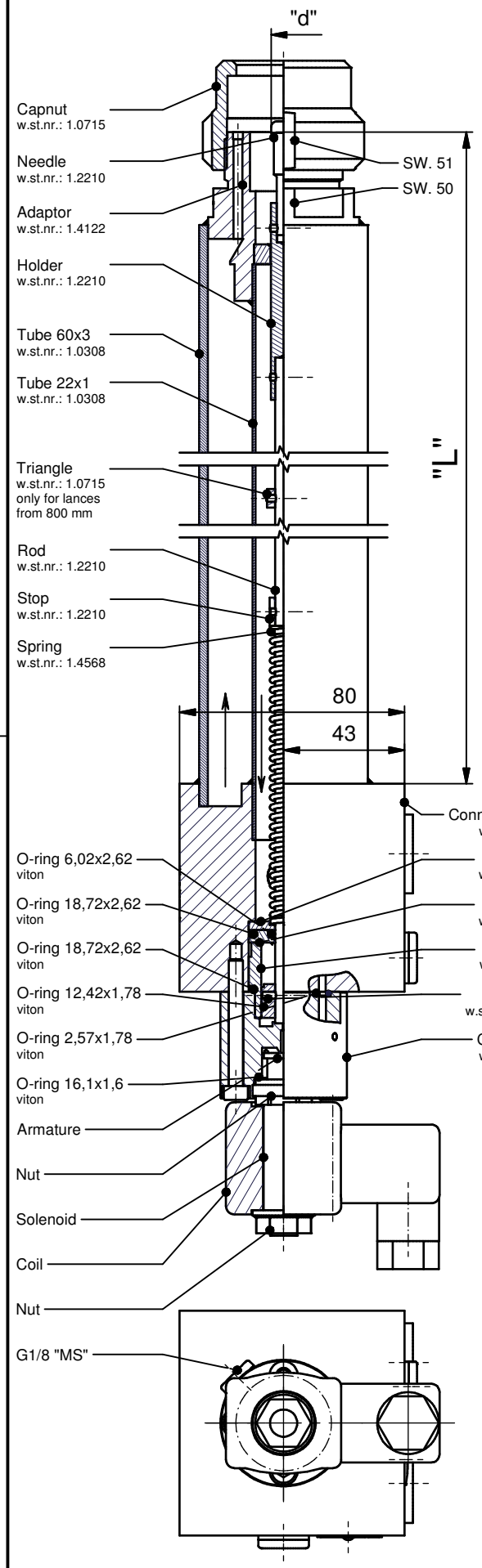

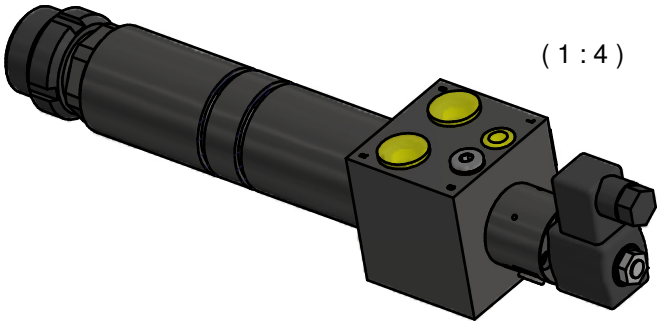

(1 : 4)

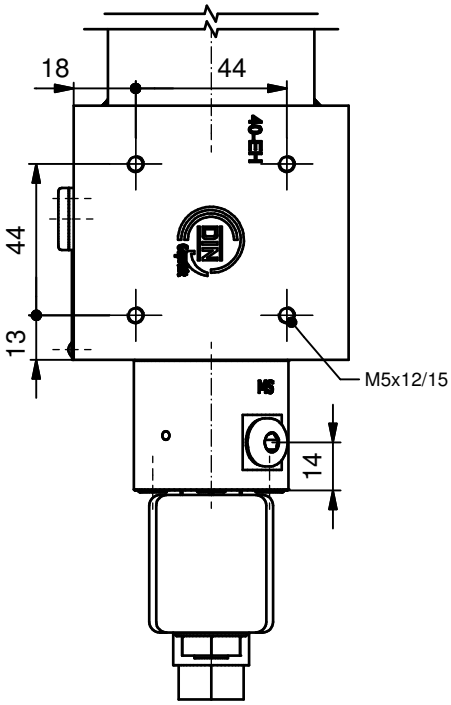

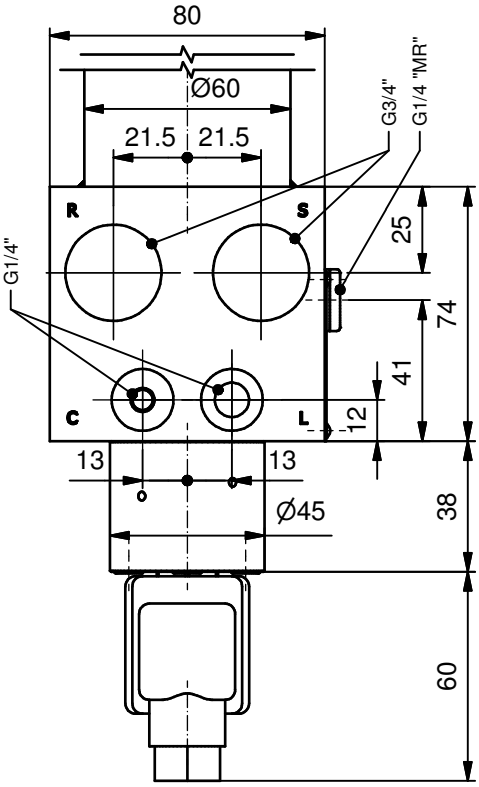

© *Fluidics Instruments BV*